AMERICAN UNIVERSITY OF SCIENCE & TECHNOLOGY

FACULTY OF ENGINEERING

DEPARTMENT OF MECHATRONICS ENGINEERING

COMPUTER AIDED DESIGN

MTE 361

Project Report

Quadcopter Design

Prepared by

Maher Alaa Deen

Presented to

Mohamad Ankouni Ph.D.

June 27, 2018

Zahle Campus

ABSTRACT

This report presents the mechanical design process of a quadcopter using Autodesk Inventor. The aim of the project was to design a quadcopter that is stable, maneuverable, and capable of carrying a payload. The report covers the different stages of the design process, including the initial concept, CAD modeling, simulation presentation and stress analysis. The design incorporates four rotors that provide lift and stability to the quadcopter. The report discusses the design considerations, including the choice of materials, the selection of motors and propellers, and the weight distribution. The prototype was tested in various conditions, and the results show that the quadcopter is stable, responsive, and capable of carrying a payload. Overall, this report provides a comprehensive overview of the mechanical design process of a quadcopter using Autodesk Inventor and can serve as a valuable resource for anyone interested in designing and building a quadcopter.

List of Figures

Figure 1. Quadcopter Main Body 3D Drawing 4
Figure 2. Quadcopter Main Body Drawing 4
Figure 3. Quadcopter Rotor and Blades 3D Design 5
Figure 4. Quadcopter Rotor Gear 3D Design 5
Figure 5. Quadcopter Rotor Gear Drawing 6
Figure 6. Rotor Holder 3D Design 6
Figure 7. Rotor Holder Drawing 7
Figure 8. Quadcopter Rotor Guard 3D design 7
Figure 9. Quadcopter Rotor Guard Drawing 8
Figure 10. Quadcopter Landing Gear 3D Design 8
Figure 11. Quadcopter Landing Gear Drawing 9
Figure 12. Quadcopter Full Assembly 9
Figure 13. Stress Analysis Force 1 11
Figure 14. Bearing Load 1 12
Figure 15. bearing Load 2 13
Figure 16. Bearing Load 3 14
Figure 17. Bearing Load 4 15
Figure 18. Von Mises Stress 16
Figure 19. 1st Principle Stress 17
Figure 20. 3rd principle Stress 18
Figure 21. Displacement 19
Figure 22. Safety Factor 20

LIST OF TABLES

Table 1: Physical Properties.....10
Table 2: Material Properties.....10
Table 3: Force 1.....10
Table 4: Bearing Load 1.....11
Table 5: Bearing Load 2.....12
Table 6: Bearing Load 3.....13
Table 7: Bearing Load 4.....14
Table 8: Gravity.....15
Table 9: Reaction Force and Moment on Constraints.....15
Table 10: Result Summary.....16

Table of Contents

I. OBJECTIVES **1**
II. BACKGROUND THEORY **1**
III. SCHEMATIC REPRESENTATION **4**
IV. MAIN BODY STRESS ANALYSIS **10**
V. CONCLUSION **20**

I. Objectives

1. To provide a comprehensive overview of the mechanical design process of a quadcopter using Autodesk Inventor.
2. To discuss the different stages of the design process, including the initial concept, CAD modeling, and stress analysis.
3. To describe the design considerations, including the choice of materials, and the selection of motors.
4. To present the results of prototype testing in various conditions and demonstrate the quadcopter's stability, responsiveness, and ability to carry a payload in a simulation environment.
5. To serve as a valuable resource for anyone interested in designing and building a quadcopter using Autodesk Inventor or other similar software.

II. Background Theory

The design and development of a quadcopter require a comprehensive understanding of various mechanical engineering principles and a range of design considerations. As such, the mechanical design process for a quadcopter is a complex and challenging task that requires careful planning, analysis, and testing to ensure optimal performance and functionality. This report provides a detailed overview of the mechanical design process of a quadcopter, highlighting the key steps involved in designing a functional and reliable quadcopter. First we'll start with the procedure to be follow as a mechanical design engineer.

As a mechanical engineer designer, the following procedure can be followed to design a quadcopter:

1. Define the Design Requirements: The first step is to define the design requirements for the quadcopter. This includes the intended use, size and weight limitations, flight characteristics, payload capacity, and any other relevant specifications.

2. Conduct Research: Conduct research on existing quadcopter designs, their features, and their performance characteristics. This will help in identifying any gaps in the existing designs and inform the development of the new design.

3. Create Initial Concept: Create a rough sketch of the quadcopter design based on the design requirements and research. This initial concept should consider the quadcopter's shape, size, and weight distribution.

4. CAD Modeling: Use CAD software to create a 3D model of the quadcopter design. The model should include all the necessary components, such as the frame, motors, propellers, and landing gear. The design should also take into account the structural integrity, aerodynamics, and weight distribution.

5. Prototype Building: Build a physical prototype of the quadcopter based on the 3D model. This stage involves the selection of appropriate materials, assembly of components, and testing of the prototype.

6. Testing and Refinement: Test the quadcopter prototype in various conditions to evaluate its stability, responsiveness, and ability to carry a payload. Based on the testing results, refine the design to improve the quadcopter's performance, stability, and durability.

7. Final Design: Create a final design of the quadcopter, incorporating all the refinements and improvements made during the design process. The final design should meet the design requirements, perform well in testing, and be suitable for the intended use.

8. Fabrication and Assembly: Fabricate the final design using the selected materials and assemble all the components.

9. Testing and Quality Control: Test the final quadcopter design to ensure that it meets the design requirements and quality standards. This includes performing safety checks, load testing, and flight testing.

10. Documentation: Document the entire design process, including the design requirements, 3D models, prototype testing results, and final design specifications.

However, in this project we are only designing and modeling the mechanical design using Autodesk Inventor.

The design of quadcopters, also known as quadrotors, is based on the principles of aerodynamics and mechanics. Quadcopters use four rotors that are arranged in a symmetric pattern to generate lift and control their motion. The rotors spin in opposite directions and can be adjusted to vary the amount of thrust produced by each rotor, which enables the quadcopter to move in different directions.

Quadcopters are commonly used for a range of applications, including aerial photography, surveillance, search and rescue operations, and delivery services. The design of quadcopters is a complex process that involves considerations of the aerodynamics, weight distribution, structural integrity, and control systems. A quadcopter's design should be optimized to achieve stability, maneuverability, and efficiency while minimizing its weight and size.

One of the critical design considerations for quadcopters is their aerodynamics. The aerodynamic forces acting on a quadcopter include lift, drag, and thrust. The lift generated by the rotors must be sufficient to overcome the weight of the quadcopter and any additional payloads. The drag on the quadcopter must also be minimized to reduce energy consumption and improve its flight time. To achieve stable flight, the quadcopter's center of gravity must be carefully balanced, and the rotors must be mounted at equal distances from the center to ensure that it does not tilt or spin uncontrollably.

Another critical consideration in the design of quadcopters is the selection of appropriate materials and components. The materials used must be lightweight, strong, and durable to withstand the forces acting on the quadcopter during flight. The choice of components, such as motors, propellers, and control systems, also plays a crucial role in the quadcopter's performance, reliability, and efficiency.

In summary, the design of quadcopters requires a comprehensive understanding of aerodynamics, mechanics, materials science, and control systems. By optimizing the design to achieve stability, maneuverability, and efficiency, quadcopters can be used for a range of applications that require unmanned aerial vehicles.

III. Schematic Representation

Quadcopter Main Body Design:

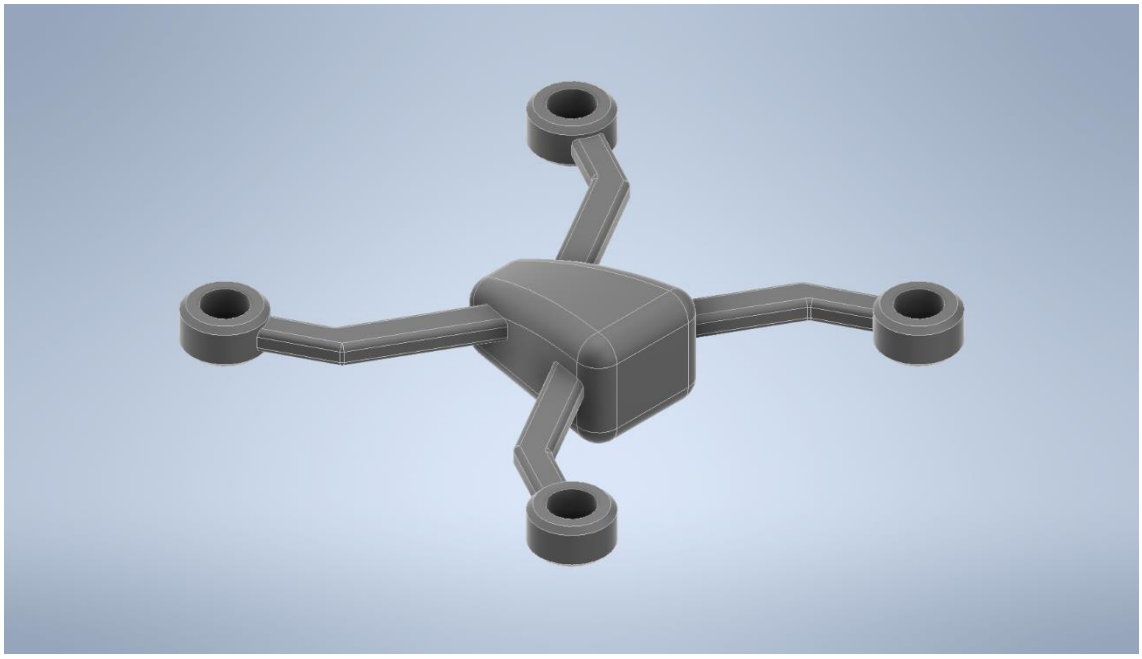

Figure 1. Quadcopter Main Body 3D Drawing

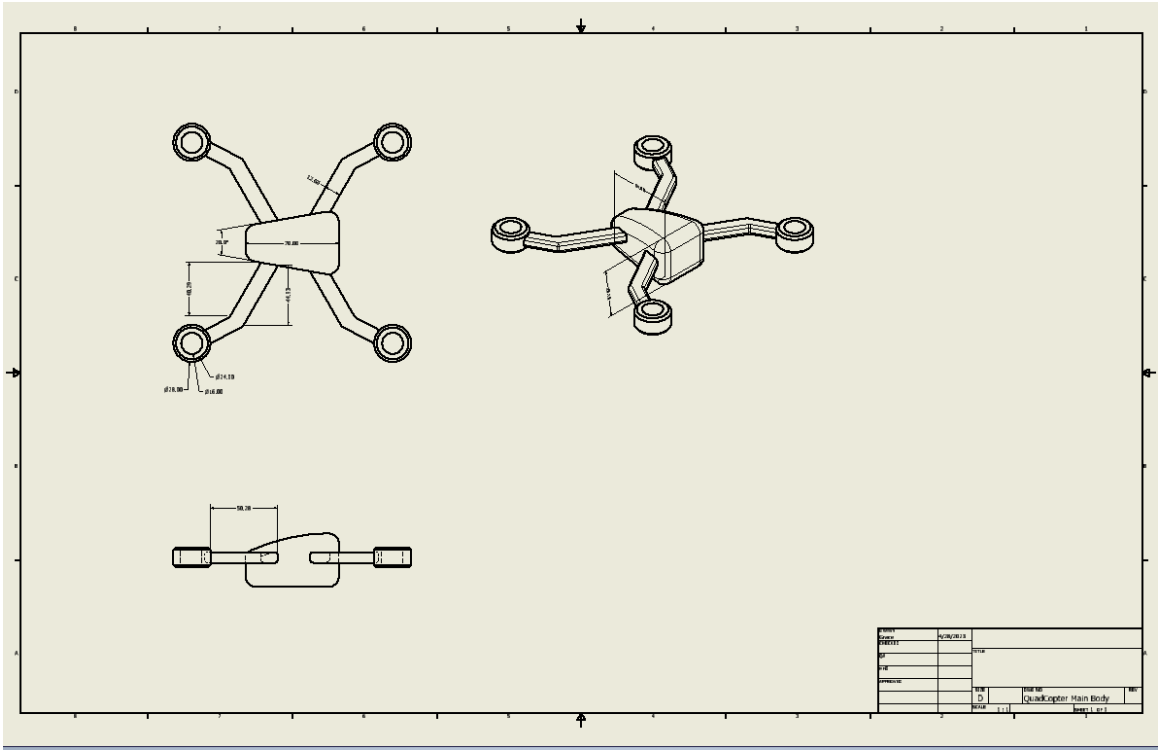

Figure 2. Quadcopter Main Body Drawing

Quadcopter Rotor Design:

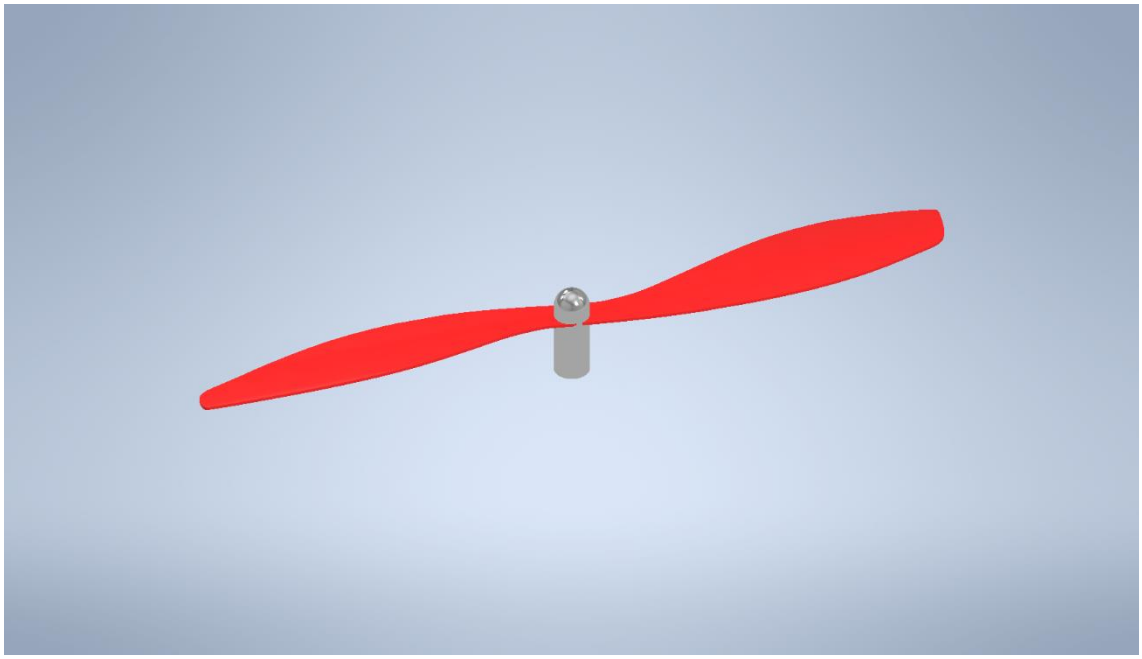

Figure 3. Quadcopter Rotor and Blades 3D Design

Quadcopter Rotor Gear Design:

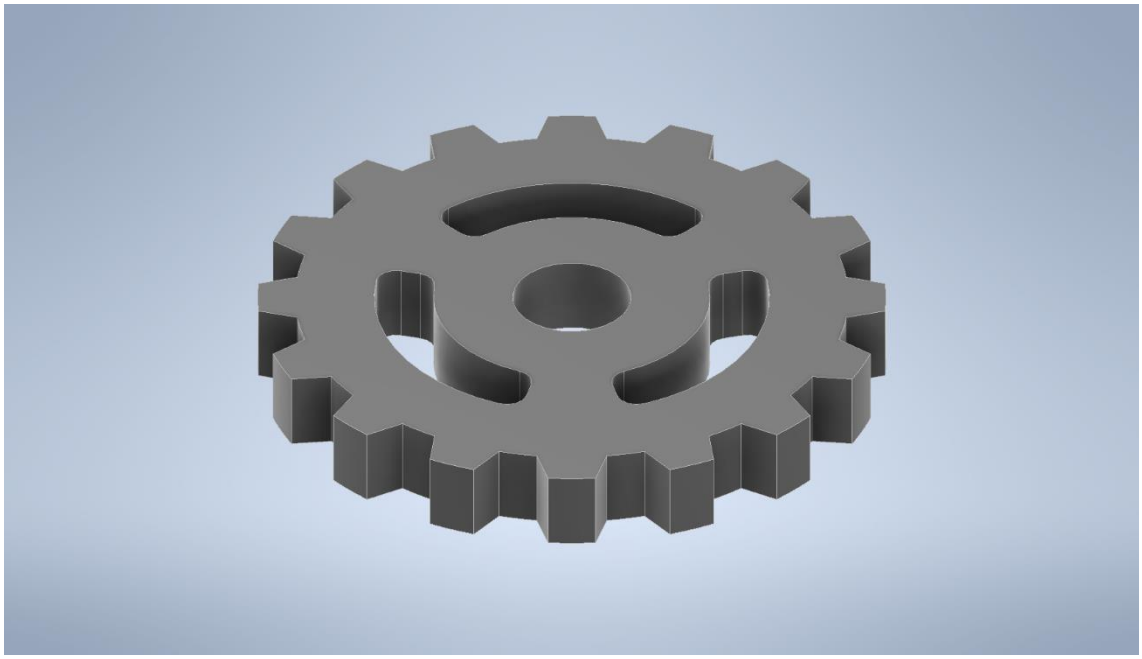

Figure 4. Quadcopter Rotor Gear 3D Design

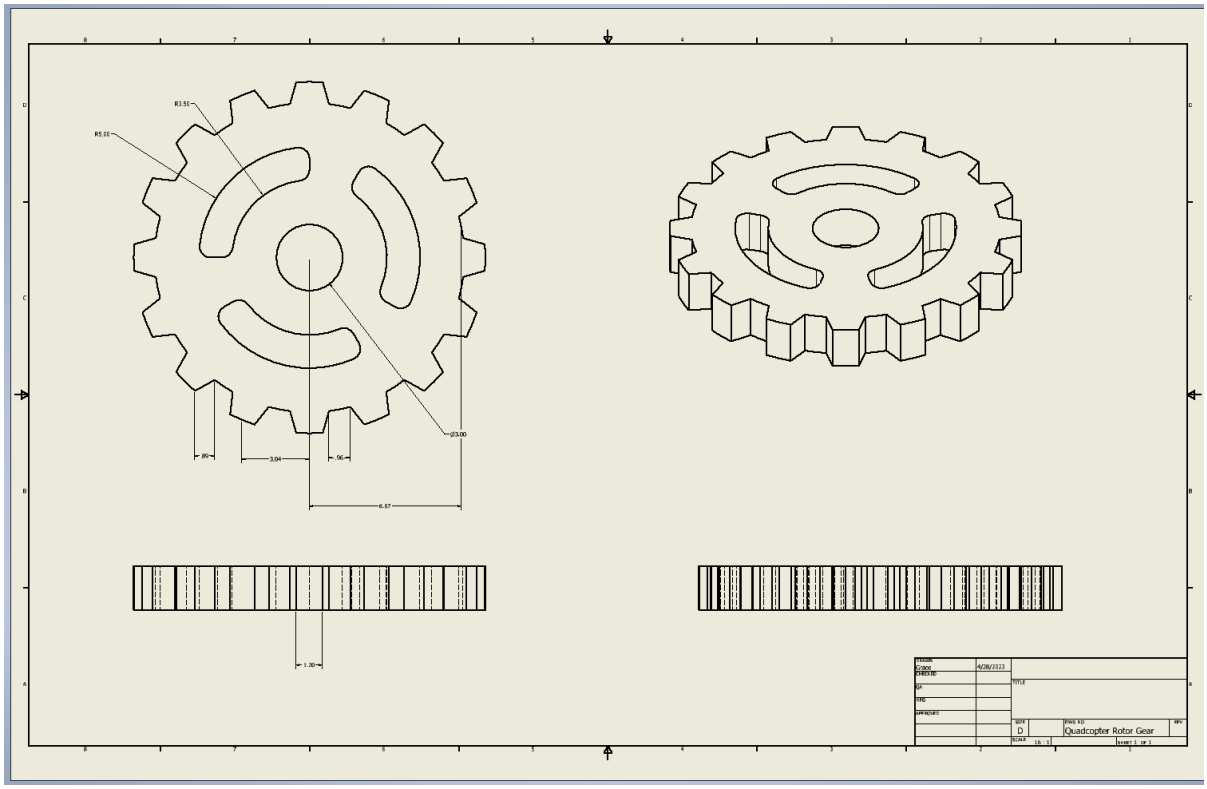

Figure 5. Quadcopter Rotor Gear Drawing

Quadcopter Rotor Holder Design:

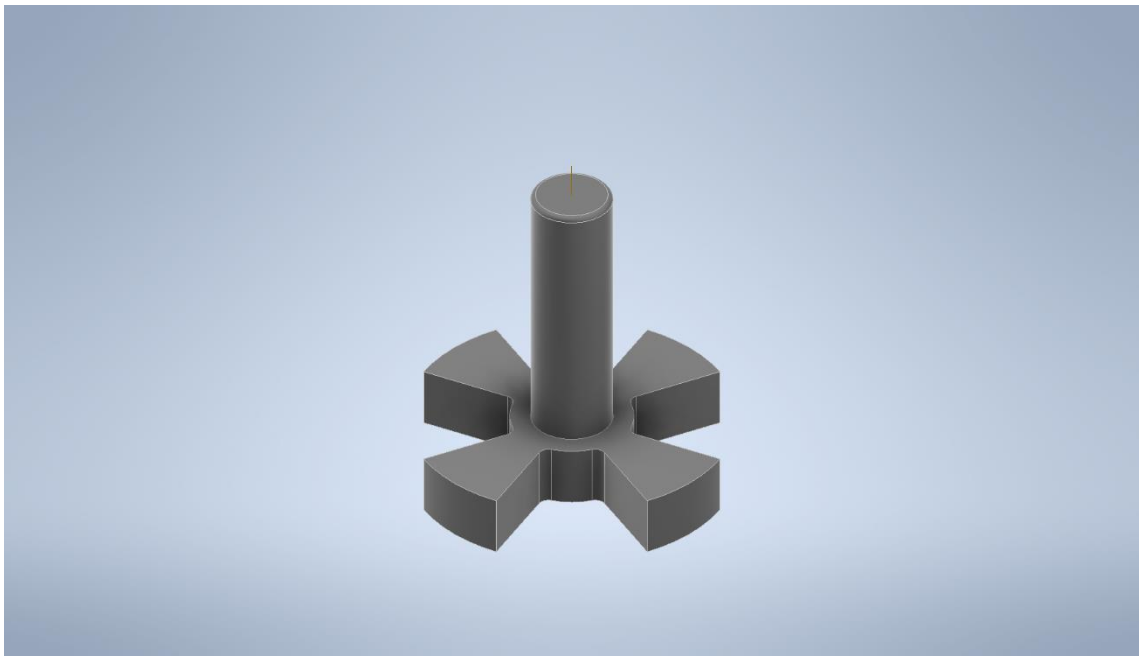

Figure 6. Rotor Holder 3D Design

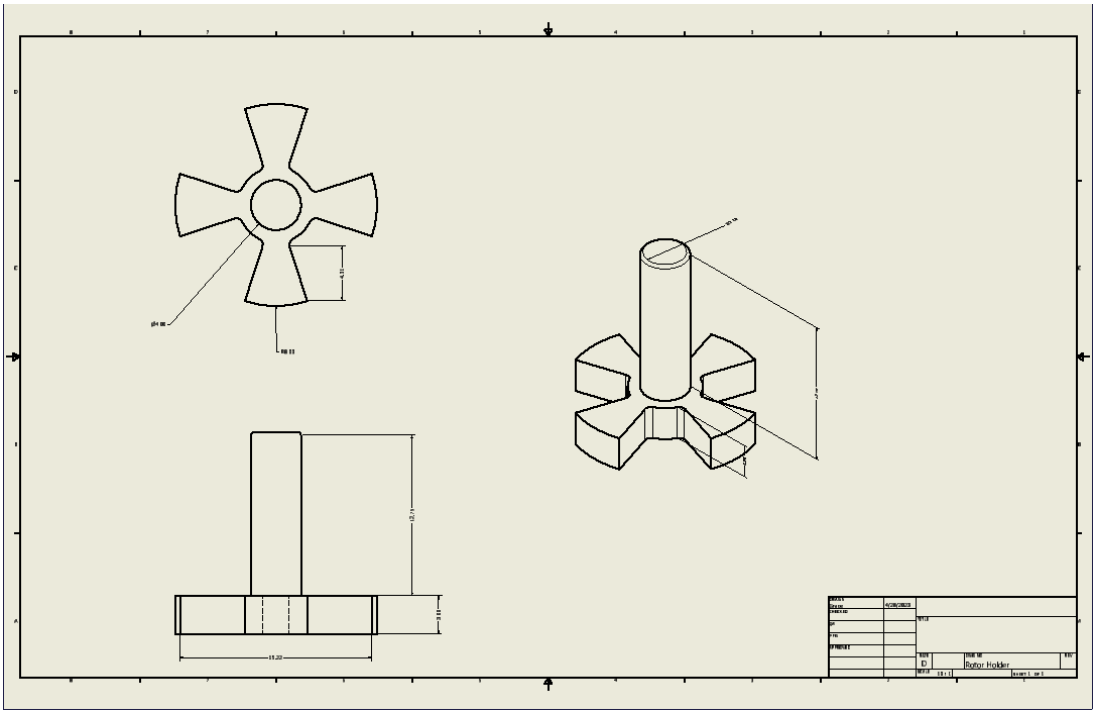

Figure 7. Rotor Holder Drawing

Quadcopter Rotor Guard Design:

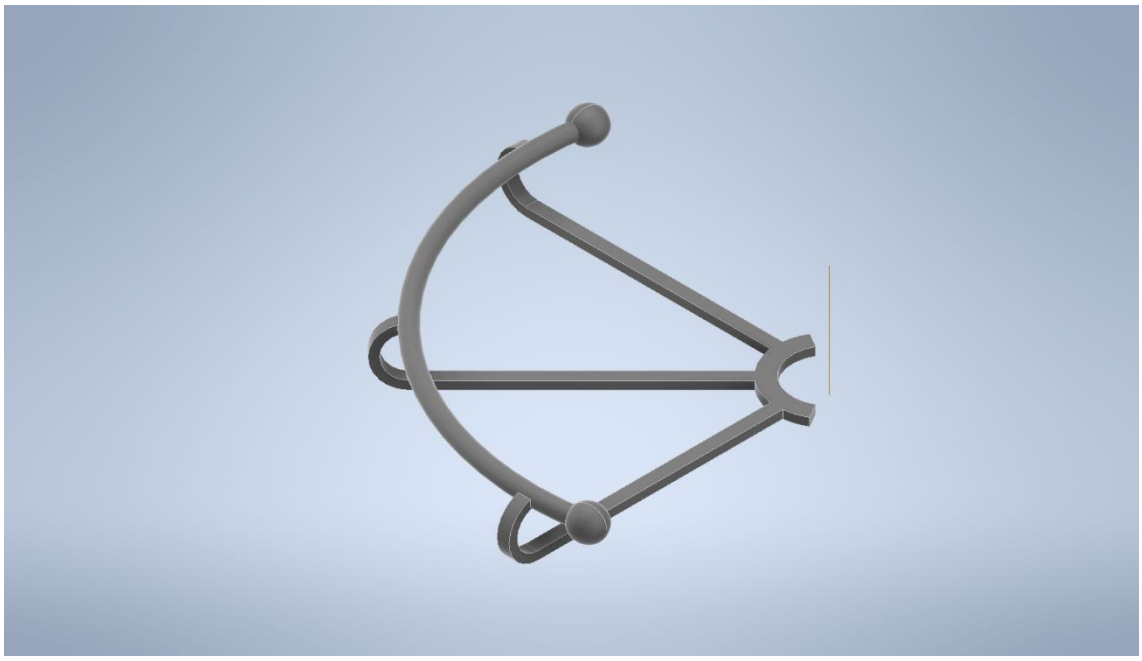

Figure 8. Quadcopter Rotor Guard 3D design

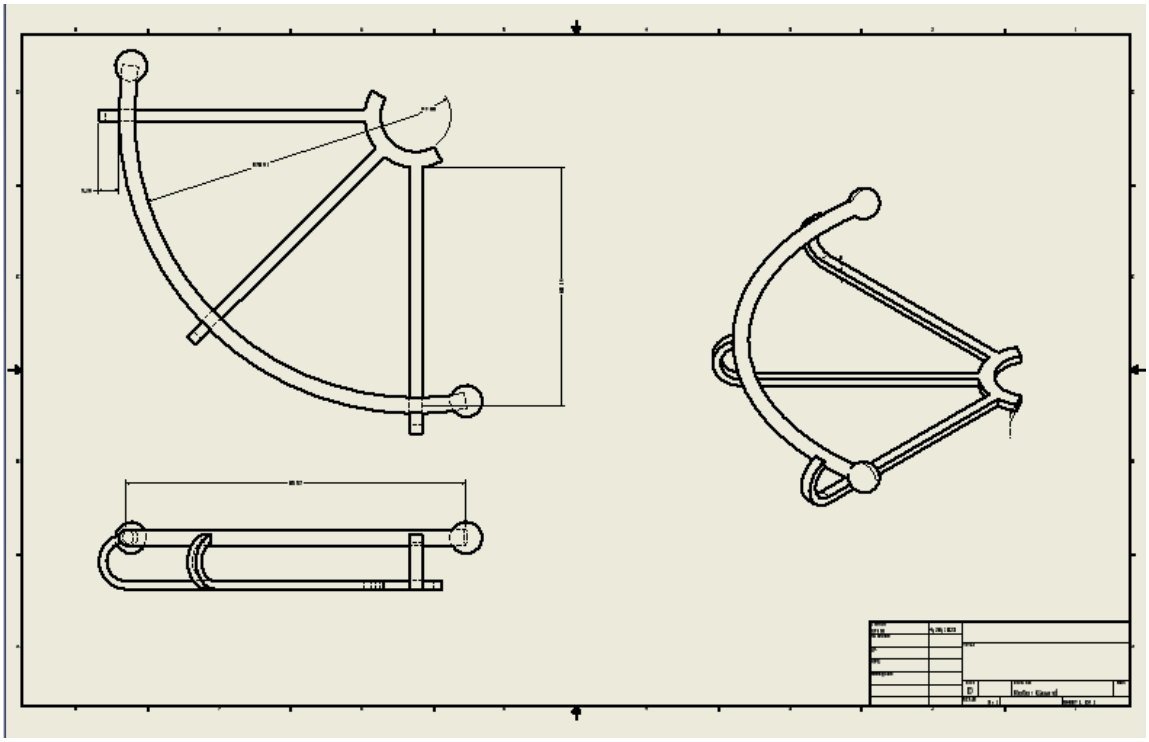

Figure 9. Quadcopter Rotor Guard Drawing

Quadcopter Landing Gear Design:

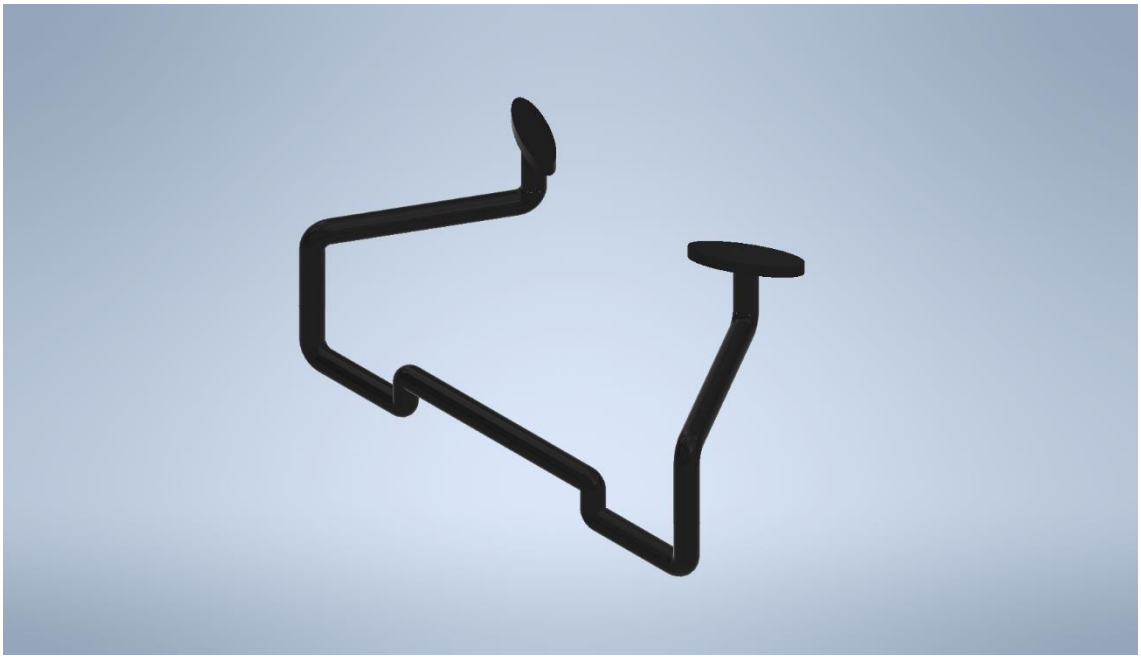

Figure 10. Quadcopter Landing Gear 3D Design

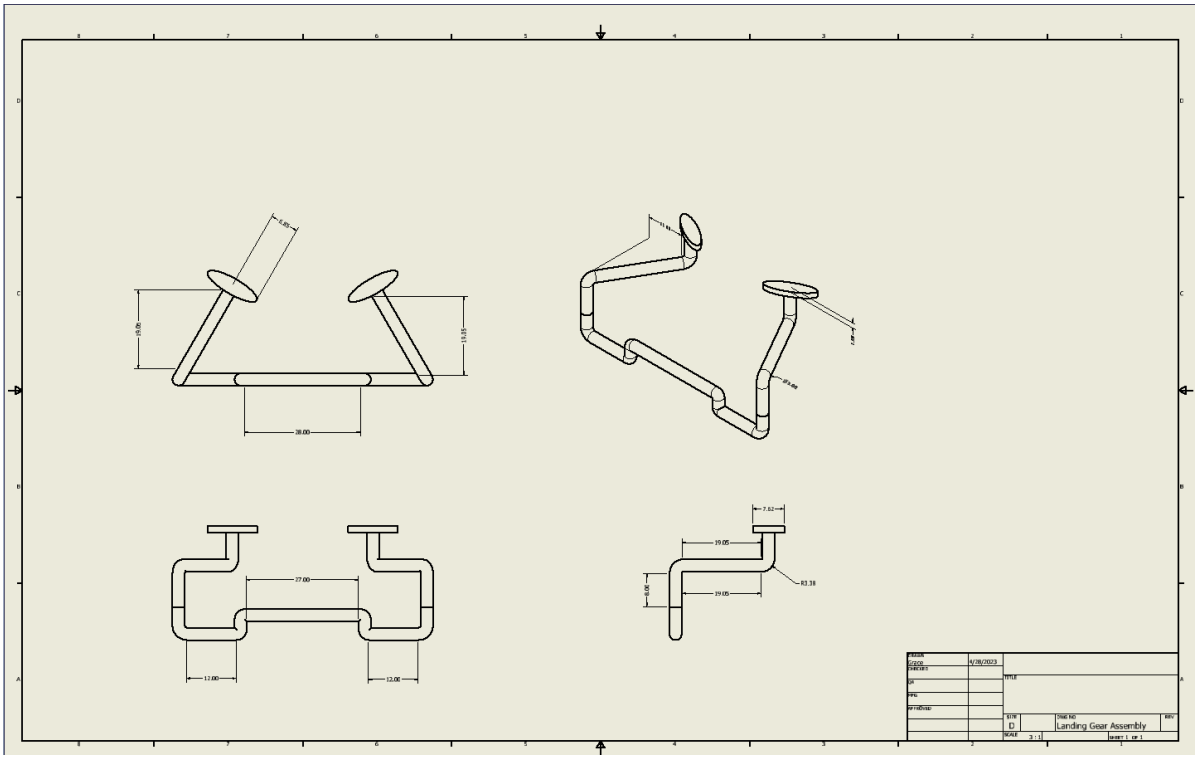

Figure 11. Quadcopter Landing Gear Drawing

Quadcopter Full Assembly:

Figure 12. Quadcopter Full Assembly

IV. Main Body Stress Analysis

Table 1. Physical Properties

Material	PC/ABS Plastic
Density	0.357273 g/cm^3
Mass	0.0489973 kg
Area	30992.3 mm^2
Volume	137142 mm^3
Center of Gravity	x=3.49722 mm y=-2.25965 mm z=0.00540883 mm

Table 2. Material Properties

Name	PC/ABS Plastic	
General	Mass Density	0.357273 g/cm^3
	Yield Strength	54.4 MPa
	Ultimate Tensile Strength	54.1MPa
Stress	Young's Module	2.78 GPa
	Poisson's Ratio	0.4 ul
	Shear Module	0.992857 GPa
Part Name	Quadcopter Main Body.ipt	

<u>Operating Conditions:</u>

Table 3. Force 1

Load Type	Force
Magnitude	20 N
Vector X	0 N
Vector Y	-20 N
Vector Z	0 N

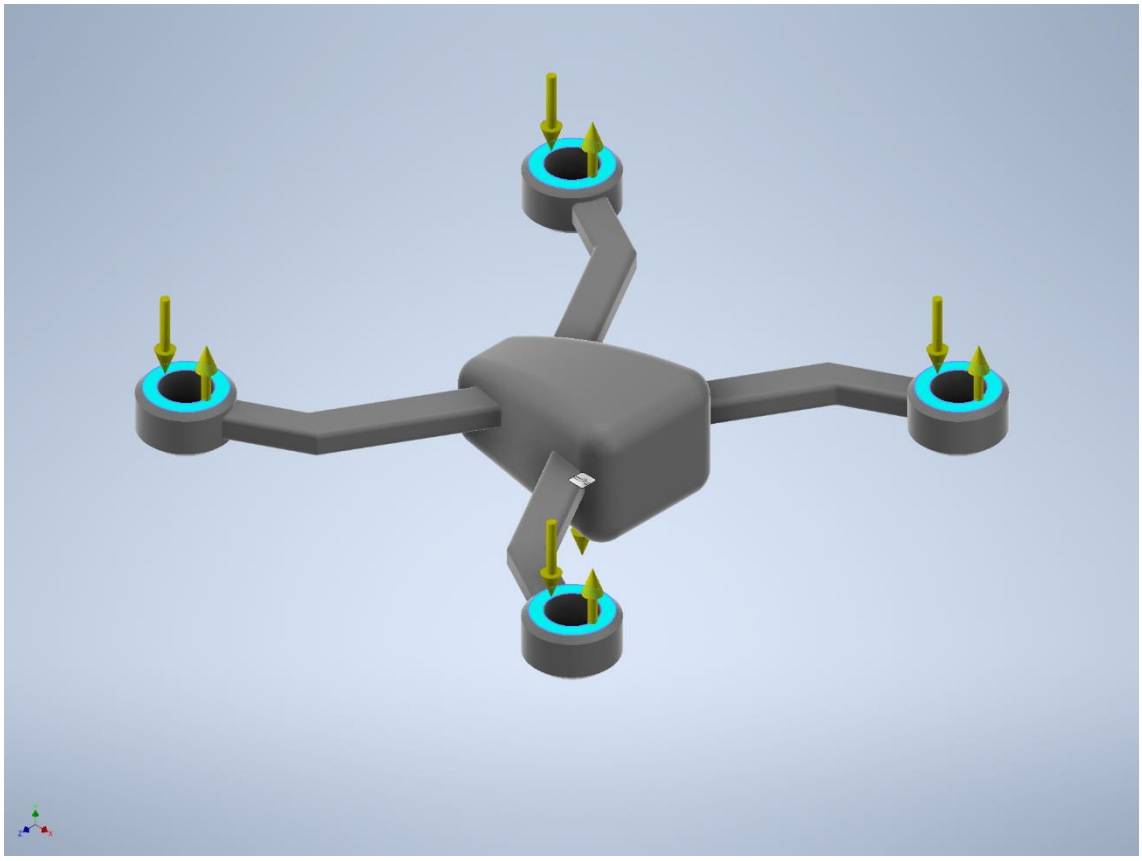

Figure 13. Stress Analysis Force 1

Table 4. Bearing Load 1

Load Type	Bearing Load
Magnitude	20N
Vector X	0 N
Vector Y	20 N
Vector Z	0 N

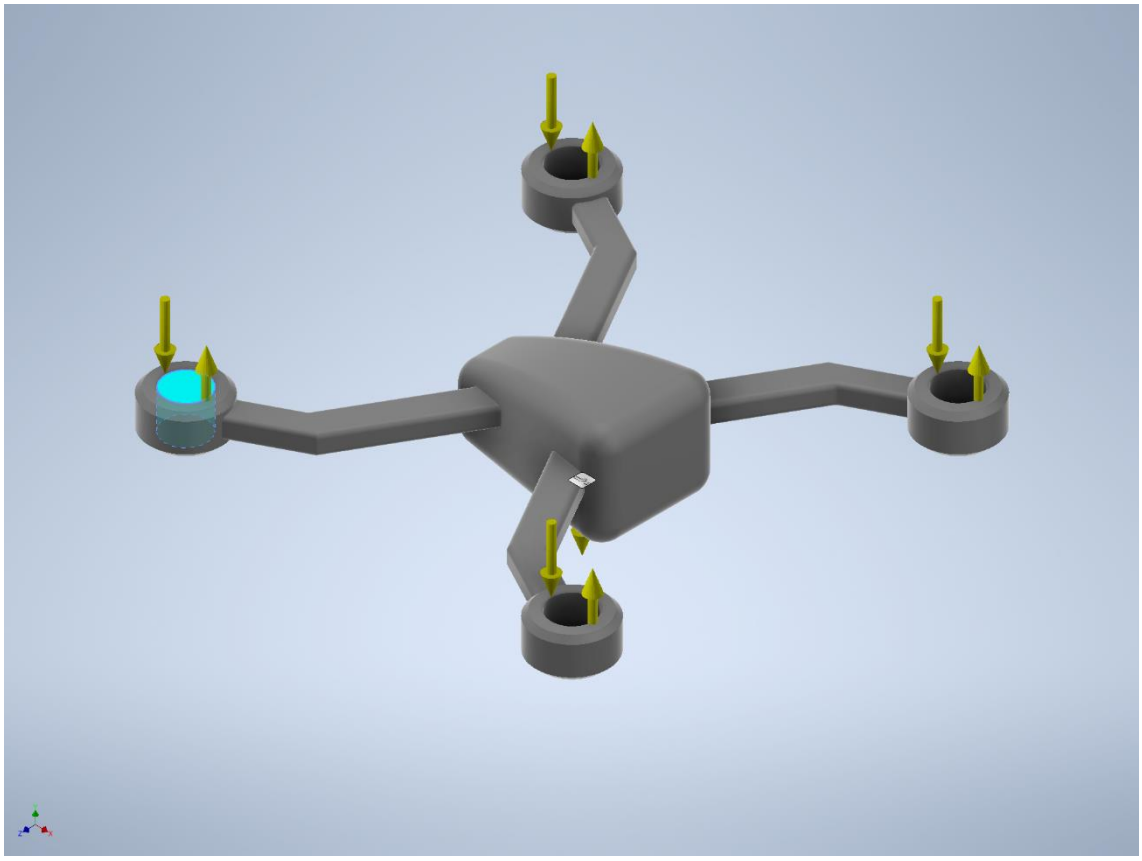

Figure 14. Bearing Load 1

Table 5. Bearing Load 2

Load Type	Bearing Load
Magnitude	20N
Vector X	0 N
Vector Y	20 N
Vector Z	0 N

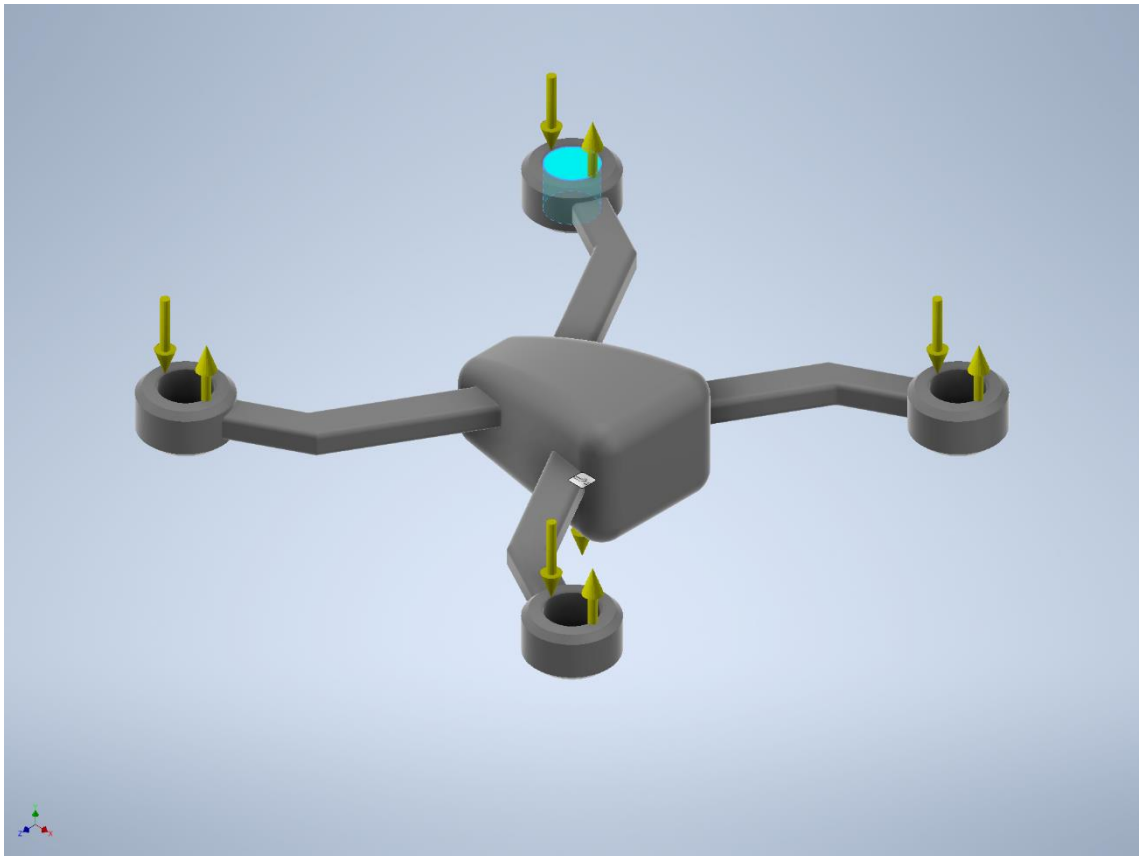

Figure 15. bearing Load 2

Table 6. Bearing Load 3

Load Type	Bearing Load
Magnitude	20N
Vector X	0 N
Vector Y	20 N
Vector Z	0 N

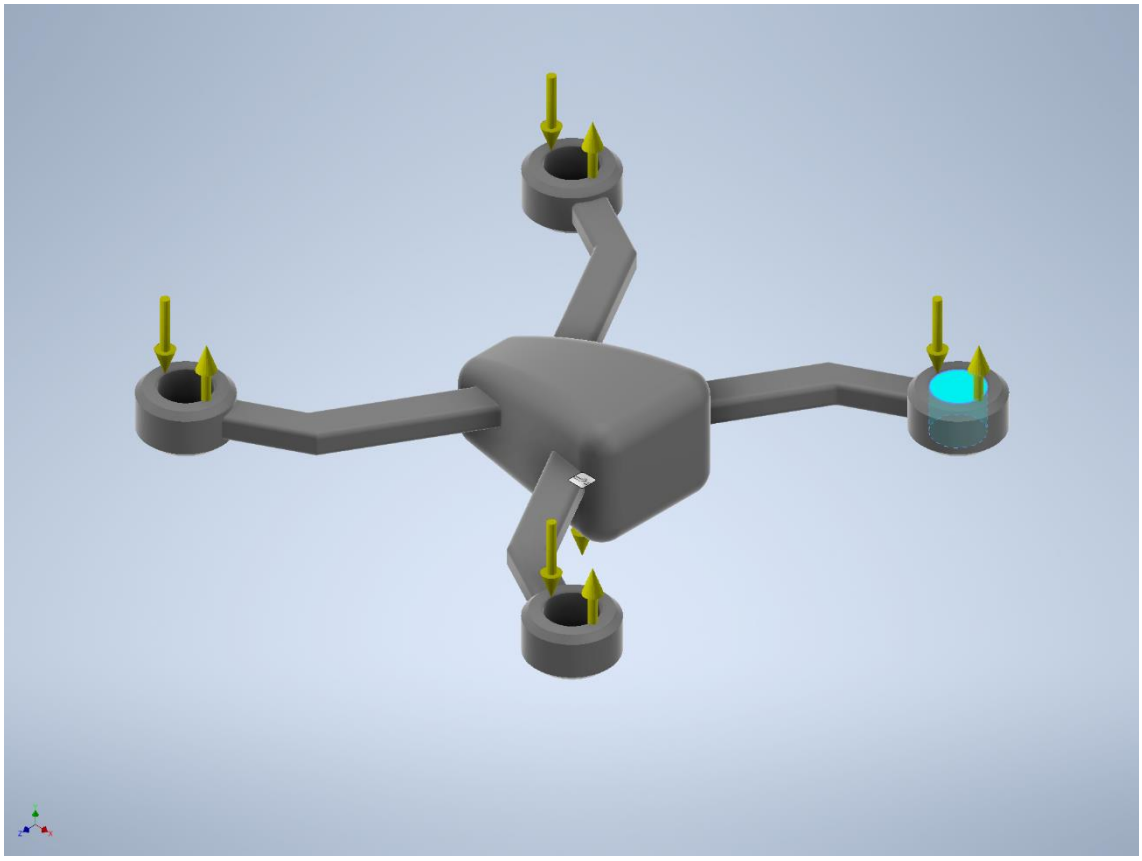

Figure 16. Bearing Load 3

Table 7. Bearing Load 4

Load Type	Bearing Load
Magnitude	20N
Vector X	0 N
Vector Y	20 N
Vector Z	0 N

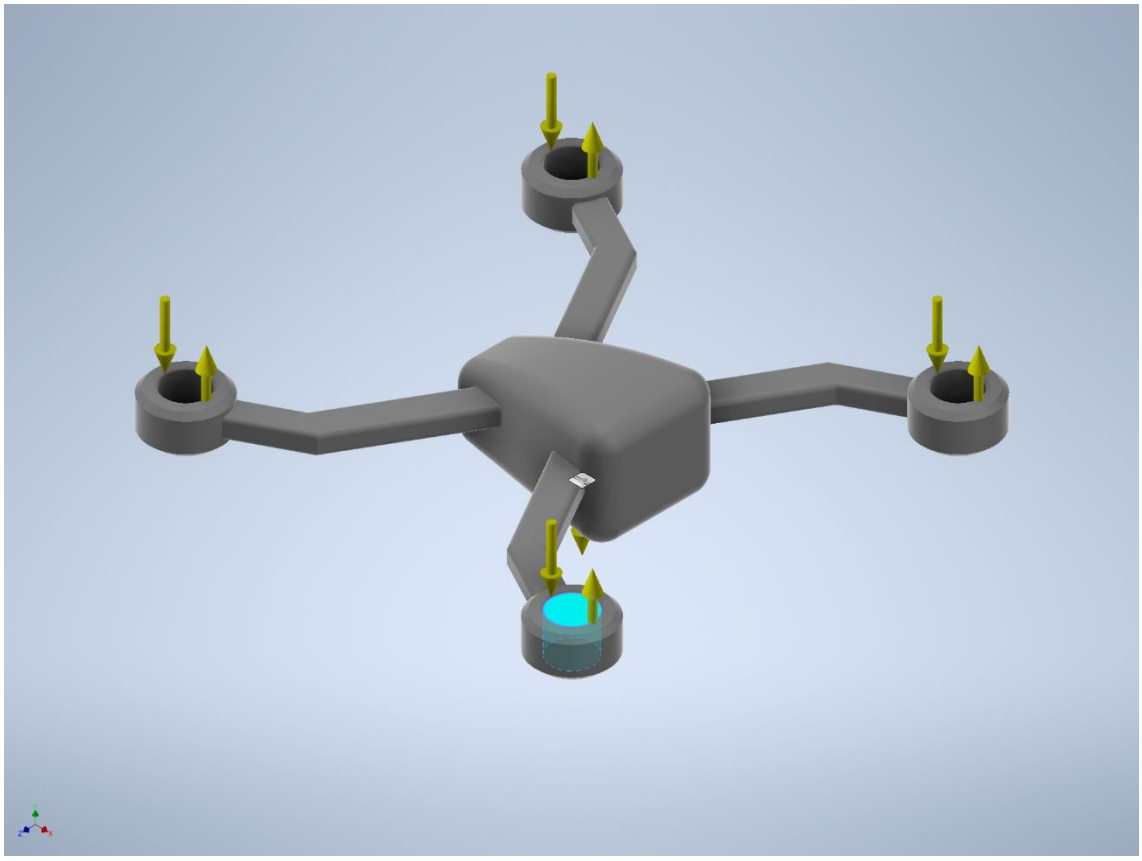

Figure 17. Bearing Load 4

Table 8. Gravity

Load Type	Gravity
Magnitude	9810.000 mm/s^2
Vector X	0.000 mm/s^2
Vector Y	-9810.000 mm/s^2
Vector Z	0.000 mm/s^2

Results:

Table 9. Reaction Force and Moment on Constraints

Constraint Name	Reaction Force		Reaction Moment	
	Magnitude	Component (X, Y, Z)	Magnitude	Component (X, Y, Z)
Fixed Constraint	59.5193 N	0 N	0.503288 N m	-0.403144 N m
		-59.5193 N		-0.00839731 N m
		0 N		-0.301169 N m

Table 10. Result Summary

Name	Minimum	Maximum
Volume	137142 mm^3	
Mass	0.0489972 kg	
Von Mises Stress	0.0111102 MPa	17.2353 MPa
1st Principle Stress	-5.53313 MPa	20.0562 MPa
3rd principle Stress	-19.7925 MPa	7.16444 MPa
Displacement	0 mm	3.20985 mm
Safety Factor	3.15632 ul	15 ul

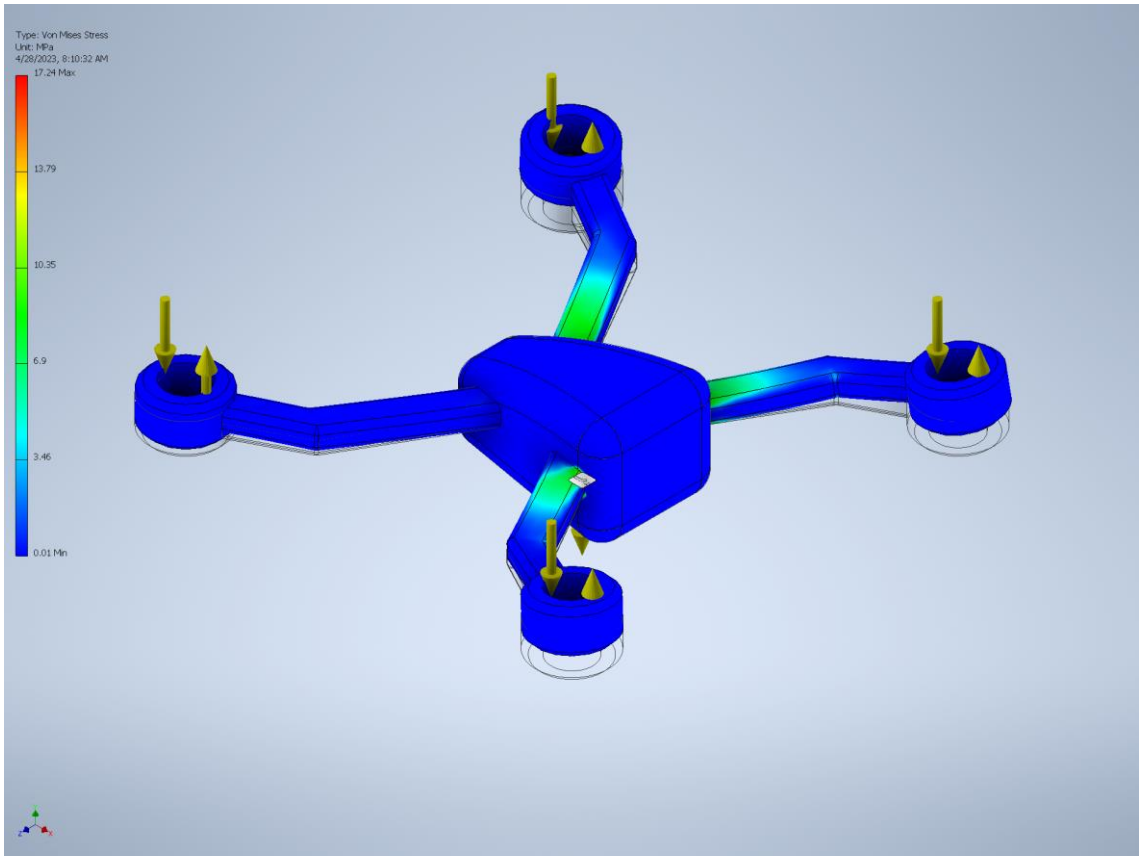

Figure 18. Von Mises Stress

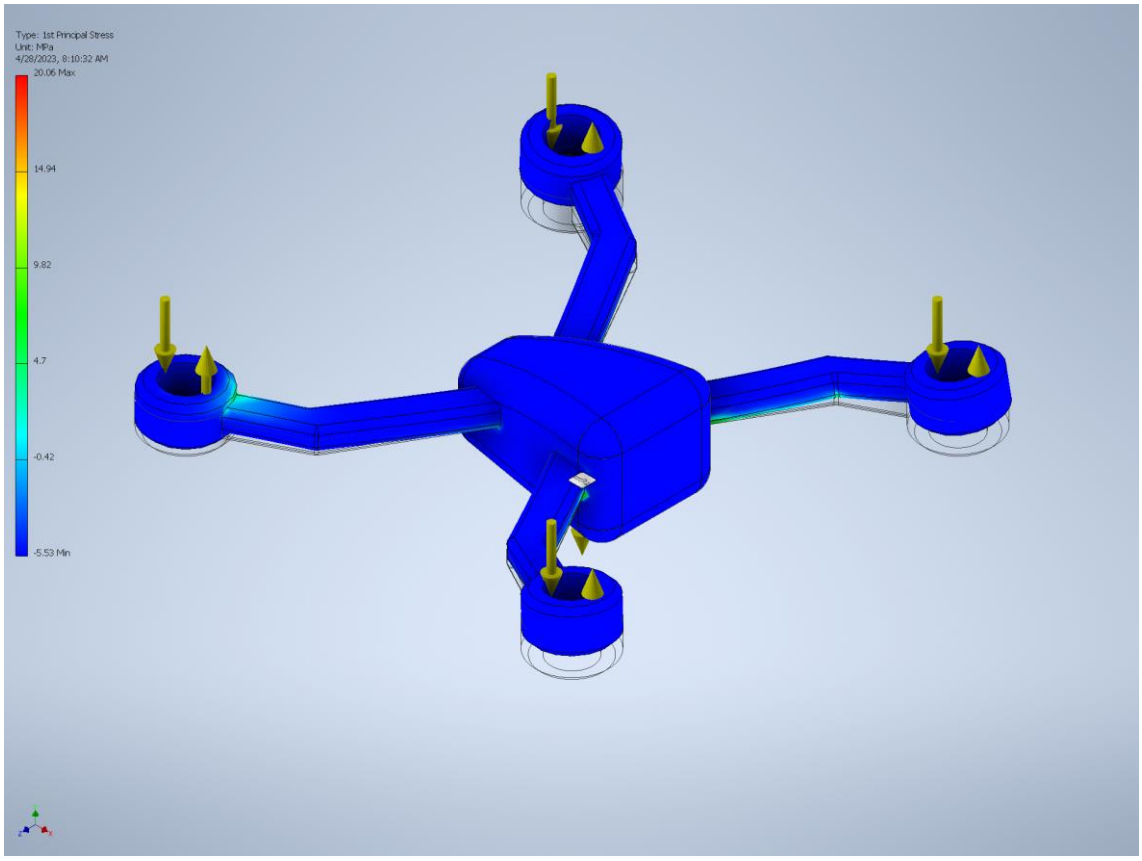

Figure 19. 1st Principle Stress

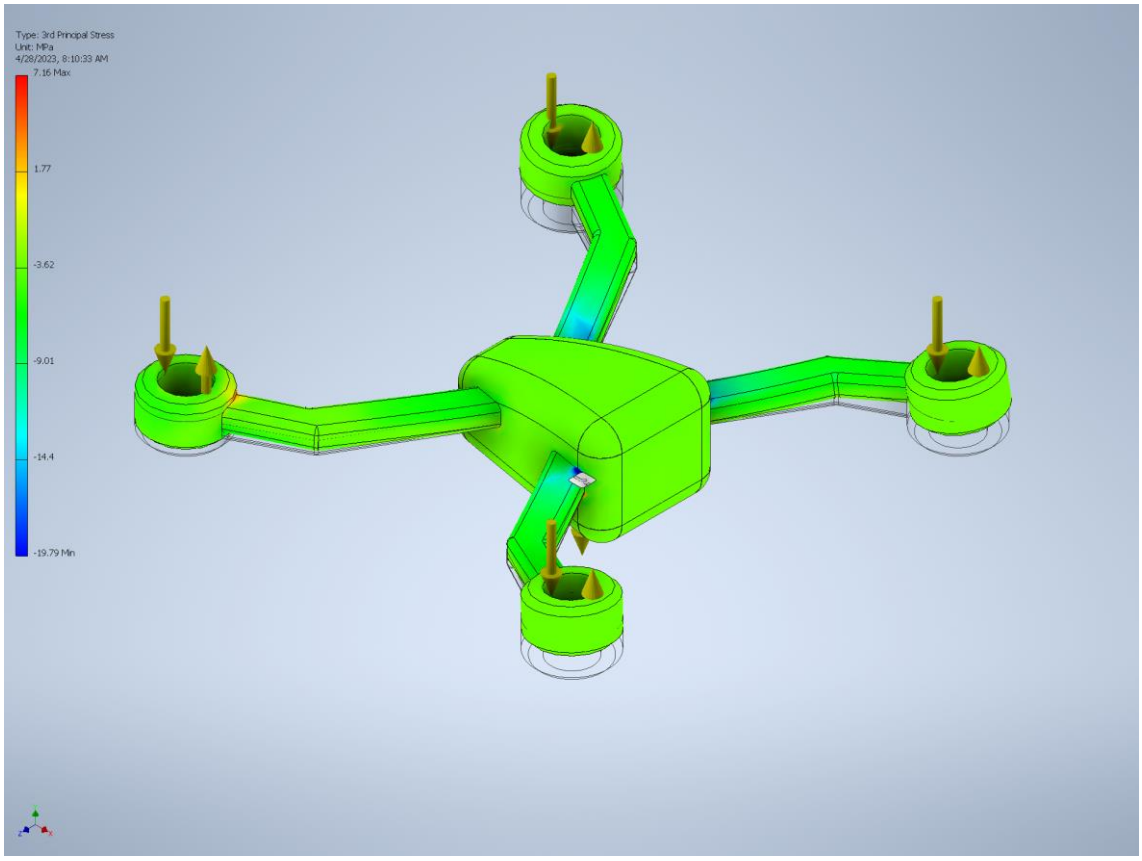

Figure 20. 3rd principle Stress

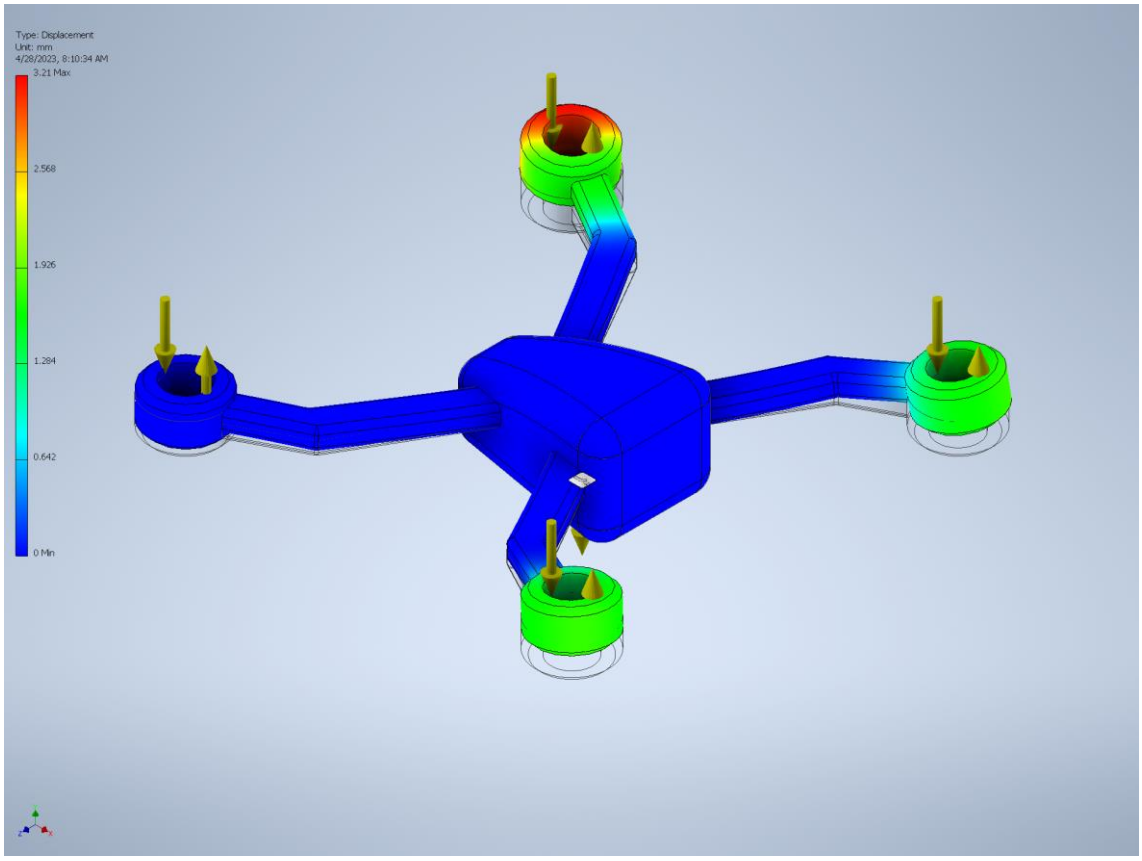

Figure 21. Displacement

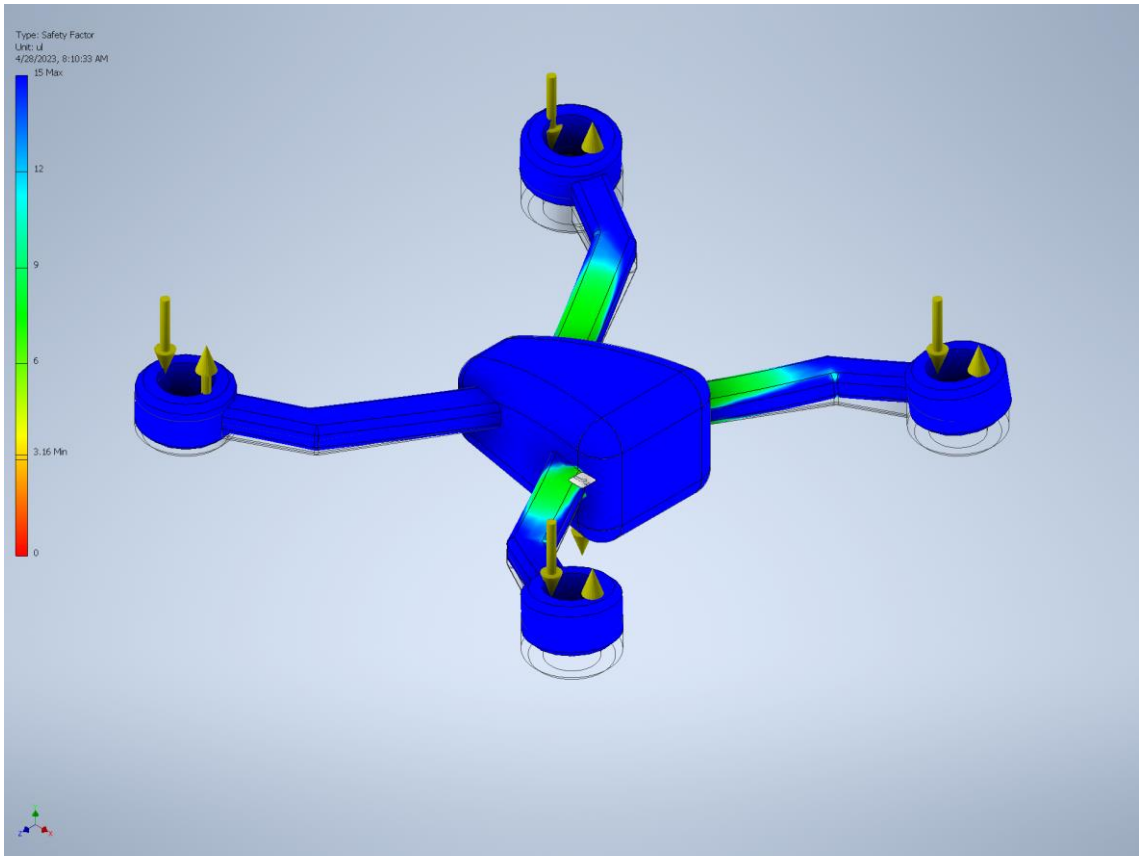

Figure 22. Safety Factor

V. Conclusion

In conclusion, the mechanical design of a quadcopter using Autodesk Inventor and stress analysis is a complex and challenging process that requires careful planning, analysis, and testing. By utilizing advanced design software, such as Autodesk Inventor, mechanical engineers can create detailed and accurate 3D models of the quadcopter's structural components, which can be used to conduct finite element analysis to determine the stresses and strains on the components.

Stress analysis is a critical part of the design process as it enables engineers to identify potential weaknesses and failure points in the quadcopter's design. By optimizing the design to minimize stress concentrations and ensure structural integrity, the quadcopter can be made more reliable and durable, which is crucial for applications that require unmanned aerial vehicles to operate in harsh and demanding environments.

Overall, the mechanical design process for a quadcopter using Autodesk Inventor and stress analysis is a comprehensive and effective approach that can help mechanical

engineers create reliable and efficient quadcopter designs that meet the desired specifications and requirements. By following the proper design procedure and conducting stress analysis, mechanical engineers can ensure that the quadcopter's design is optimized for stability, maneuverability, and efficiency, while minimizing weight and size.